The Light Control Case Study:
Problem Description

Stefan Queins
Gerhard Zimmermann
Martin Becker
Martin Kronenburg
Christian Peper
Rolf Merz
Jürgen Schäfer

(University of Kaiserslautern, Germany
{queins, zimmerma, mbecker, kronburg, peper}@informatik.uni-kl.de,
merz@eit.uni-kl.de)

Abstract: This document contains a range of needs and requirements concerning the construction of a light control system for a floor of a university building. A description of the building architecture and of some pre-installed (light-)hardware is included. This problem description was the common input for all participants of the requirements engineering case study "Light Control".

Key Words: requirements engineering, building automation, problem description

Introductory Note

This document gives an informal description of the problem "Light Control System", that is the subject of the considered case study. It is based on two previous versions that have been used in the Sonderforschungsbereich 501 "Development of Large Systems with Generic Methods", a large project at the Computer Science Department of the University of Kaiserslautern. The initial version was created in 1995 by Stefan Queins and Gerhard Zimmermann. The second version (reported in [Fe+99]) integrates several changes by Martin Becker and Martin Kronenburg. This version was also used in a Dagstuhl Seminar on "Requirements Capture, Documentation, and Validation" that took place in June 1999.

Finally, the version presented here is the result of repeated revisions by Martin Kronenburg and Christian Peper in agreement with Rolf Merz and Jürgen Schäfer from the Electrical Engineering Department of the University of Kaiserslautern, who were acting as customers in the light control case study (LCCS). Some additional improvements are based on input received from Daniel Berry, Vincenzo Gervasi, Julio Leite, and Vinicius da Silva Almendra.

Thus, the basic intention of providing a customer document as the basis for the case study has been preserved. The revisions were intended to reduce the need for customer feedback during the LCCS. Furthermore, to achieve solutions that are better comparable, all interactions between the customer and the participants of the case study have been published on the web [CF99].

The problem description "Light Control" is divided into 4 parts. [Part 1] is a brief introduction. [Part 2] describes the architecture of the 4th floor of a university building in Kai-

serslautern, which is the subject of the informal needs given in [Part 3]. Finally, [Part 4] lists and explains technical terms that are used in the document.

Note that this is a reformatted version of the original LCCS problem description [PD99]. To support the traceability of any references into the original layout, the former page numbers are included here in the format *(n)*. The original paragraph numbering now appears at the end of the paragraphs as [n], most line breaks are preserved.

(3)

1 Introduction

The main motivation for the development of a new light control system are the disadvantages of the currently existing system. Since all lights are controlled manually, electrical energy is wasted by lighting rooms which are not occupied and by little possibilities to adjust light sources relative to need and daylight. [1]

In the following document,

- *keywords* are marked at their first occurrence and listed in the additional dictionary [Part 4]. [2]
- Words written in *emphasis* are names of physical sensors/actuators. [3]
- Paragraphs are numbered for easier reference. [4]

(4)

2 *Floor* Description

In this part, the *architecture* and the *installation* of the given *sensor*s and *actuator*s of Building 32, 4th floor is described. [5]

The fourth *floor* of Building 32 consists of three *section*s and shares two *staircase*s, staircase east (SCE) and staircase west (SCW), with other floors of the building, as shown in Figure 1. *Each* section is divided into some *hallway section*s (H) and *room*s, each of which may be an *office* (O), a *computer lab (*CL), a *hardware lab* (HL), a *peripheral room* (P), or

(5)

a *meeting room* (M). All rooms in a section are accessible via a connected hallway section. There are three hallway sections and 22 rooms to control. [Figure 1] shows also the six *outdoor light sensor*s (*ols1 - ols6*) and the major compass directions. The sensors cover the six directions of the different walls. The label in a room indicates the type of the room and gives a unique number, see [Figure 1]. [6]

2.1 Office Description

Each office (shown in [Figure 2]) has one *door* (d1) to the hallway section and can have up to two doors (d2, d3) leading to its adjacent rooms. Each door is equipped with a *door closed contact*, named *dcc<n>*, where n is the number of the door in the room. [7]

Each office is equipped with [8]

1. one *motion detector* (*imd*), so that the room is fully covered.
2. two *ceiling light group*s (window and wall). The luminaries in a ceiling light group in any room are turned on or off only as a group.
   Each ceiling light group is controlled by one *push button* on the wall (*pb1* and *pb2*, respectively), which toggles the ceiling light group if pushed.

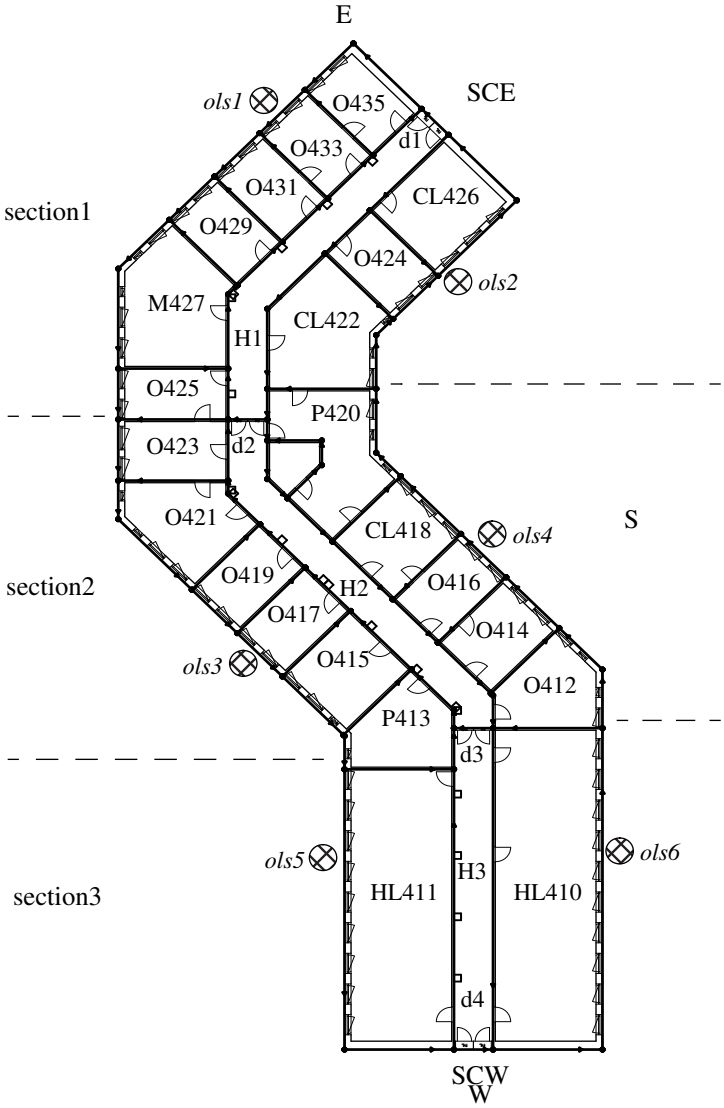

Figure 1: Architecture of the 4th Floor of Building 32

A ceiling light group in a room shows the following behavior if the corresponding push button is pushed:

(i) if the ceiling light group is completely on, it will be switched off

(ii) otherwise it will be switched on completely.

3. Each ceiling light group can be dimmed with its own dimmer-actuator.

4. two *status line*s (*sll1 and sll2*) each of which shows the status of one ceiling light group.

2.2 Computer Lab Description

Same as office. [9]

2.3 Hardware Lab Description

Same as office, but with more than one door leading to the hallway section. [10]

2.4 Meeting Room Description

Same as office. [11]

2.5 Peripheral Room Description

The peripheral rooms will not be controlled by the *control system*, and thus they are not described here! [12]

2.6 Hallway Section Description

Each hallway section is limited by two doors, each of which is leading to an adjacent hallway section or to an adjacent staircase. The associated names of the doors (d1, d2, d3, d4) are shown in Figure 1. Each door is equipped with a door closed contact, named *dcc<n>*, where *n* is derived from the label of the door. [13]

Each hallway section is equipped with [14]

1. two motion detectors (*imd1* and *imd2*), placed above the doors at each end of the hallway section to determine the presence of a person near a door,

   (6)

2. one motion detector to cover the whole section (*imd3*),
3. one *hallway section ceiling light group.* The luminaries in a hallway section ceiling light group are turned on or off only as a group.
   Each ceiling light group is controlled by several push buttons (*pb<i>*) each of which toggles the ceiling light group if pushed.
   A hallway section ceiling light group shows the following behavior if a push button is pushed:
   (i) if the hallway section ceiling light group is on, then it will be switched off
   (ii) otherwise it will be switched on
4. one *status line* (*sll1*) that shows the status of the hallway section ceiling light group.

2.7 Staircase Description

Each staircase connects several floors. [15]

At the landing of each staircase at each floor, the staircase is equipped with [16]

1. one motion detector (*imd1*) above the door of the landing that leads to the adjacent hallway section to detect motion in the staircase near the door.

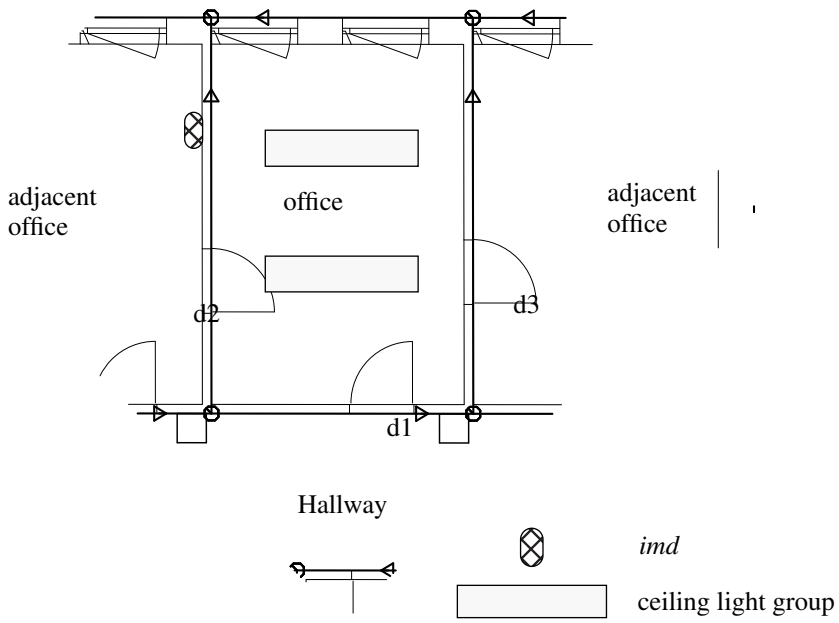

Figure 2: Office Architecture

(7)

2.8 Sensor Description

*Analog sensor*s typically have an exponential response time. Conversion time is the time to convert the analog value to a digital one that can be accessed by the control system. Reaction time is the time from a change of the sensed property to the time when the sensor has reached 90% of the change, excluding conversion time. [17]

Type	Reso-lution	Range	Reaction Time	Conver-sion Time	Description
door closed contact		0, 1	10 ms		It is placed above the door and is 1 if the door is fully closed, 0 otherwise
motion detector		0, 1	1 s		If set to 1, a person is moving, even very slowly, in the range of the detector.
status line		0, 1	10 ms		Senses if the light voltage is turned on (1) or off (0).
outdoor light sensor	1 lux	1-10000 lux	10 ms	1 s	Mounted perpendicular to facade, measures the *illumination* of the facade for the calculation of light flow through a window.

Table 1: Sensors

2.9 Actuator Description

Actuators have a linear response time. Reaction time is therefore defined as the time to change from 0 to 100% respectively 100 to 0%, if different. [18]

Type	Range	Control	Reaction Time	Description
control system active		0, 1	10 ms	If the control system sends a 1 within every 60 s, the control system is still alive.
dimmer	0-100%		10 ms	Controls light between 0 (off) and 10-100% (on).
pulse	0, 1		10 ms	If the value changes from 0 to 1, the light changes from on to off or from off to on.
push button		0, 1	10 ms	1 as long as pushed

Table 2: Actuators

(8)

2.10 Dimmable Light

The structure of a *dimmable light* is shown in [Fig. 3]. Inputs to a dimmable light are created by a *pulse* to toggle the light, by a *dimmer* to set the current dim value, and by *control system active* to show the status of the control system. If this signal is not sent every 60 s, the dimmable light switches to fail safe mode, i.e. dim value is assumed to be 100%. Outputs of a dimmable light are generated by a *status line* to show the current state (on or off) of the light: [19]

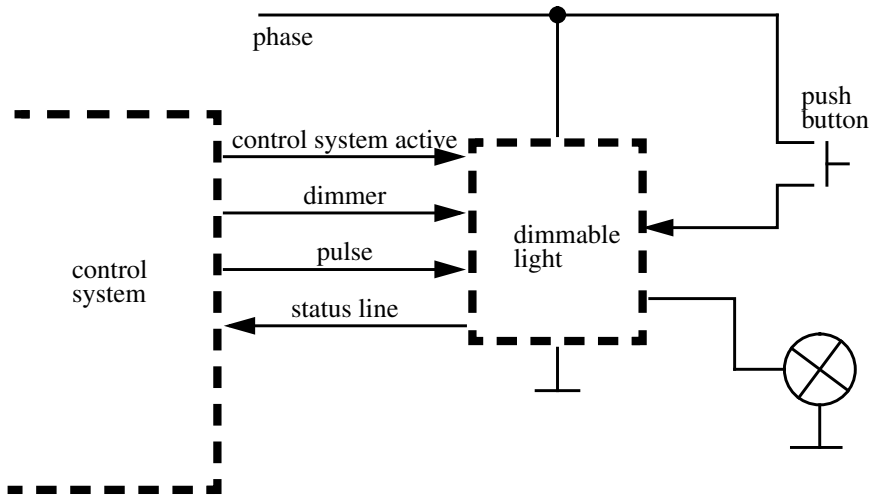

Figure 3: Dimmable Light

3 Informal Needs

(9)

This part contains the needs for a new light control system for the fourth floor of Building 32 of the University of Kaiserslautern. [20]

In [Sec. 3.1], functional needs are listed and in [Sec. 3.2] non-functional needs are listed. [21]

3.1 Functional Needs

The functional needs are split into two groups, *user* needs and *facility manager* needs, depending on the person who has expressed them. [22]

3.1.1 User Needs

The user needs are labelled by U<number>. [23]

At first, general user needs are listed, which are demanded for each kind of room: [24]

- U1 If a person occupies a room, there has to be *safe illumination*, if nothing else is desired by the *chosen light scene*.
- U2 As long as the room is occupied, the chosen light scene has to be maintained.
- U3 If the room is reoccupied within T1 minutes after the last person has left the room, the chosen light scene has to be reestablished.
- U4 If the room is reoccupied after more than T1 minutes since the last person has left the room, the *default light scene* has to be established.
- U5 For each room, the chosen light scene can be set by using the *room control panel*.
- U6 For each room, the default light scene can be set by using the room control panel.
- U7 For each room, the value T1 can be set by using the room control panel.
- U8 If any outdoor light sensor or the motion detector of a room does not work correctly, the user of this room has to be informed.
- U9 The room control panel for an office should contain at least:
  - (i) a possibility to set each ceiling light group
  - (ii) a possibility to set the chosen and the default light scene
  - (iii) a possibility to set T1

The user needs concerning the offices are: [25]

- U10 The ceiling light groups should be maintained by the control system depending on the *current light scene*.
- U11 A room control panel in an office should be movable as is a telephone.

The user needs for the remaining rooms are: [26]

- U12 In all other rooms, the room control panel should be installed near a door leading to the hallway section.

The user needs for the hallway sections are: [27]

- U13 When a hallway section is occupied by a person, there has to be safe illumination.
- U14 Before a person enters one hallway section from another one or from a staircase, the hallway section ceiling light group in the section being entered has to be on.

3.1.2 Facility Manager Needs

(10)

The facility manager needs are labelled by FM<number>.[28]

- FM1 Use daylight to achieve the *desired light setting* of each room and each hallway section whenever possible.

FM2 The ceiling light group in each hallway section has to be off when the hallway section has been unoccupied for at least T2 minutes.
FM3 The ceiling light groups in a room have to be off when the room is unoccupied for at least T3 minutes.
FM4 For each hallway section, the value T2 can be set by using the *facility manager control panel*.
FM5 For each room, the value T3 can be set by using the facility manager control panel.
FM6 The facility manager can turn off the ceiling light groups in a room or hallway section that is not occupied.
FM7 If a *malfunction* occurs, the facility manager has to be informed.
FM8 If a malfunction occurs, the control system supports the facility manager in finding the reason.
FM9 The system provides reports on current and past energy consumption.
FM10 All malfunctions and unusual conditions are stored and reported on request.
FM11 Malfunctions that the system cannot detect can be entered manually.

3.2 Non-Functional Needs

The non-functional needs are split into several groups according to the aspect they are dealing with. They are labelled by NF<number>. [29]

3.2.1 Fault Tolerance

In any case of failure, the system shall provide a stepwise degradation of functionality down to manual operability. [30]

Needs in the case of a malfunction of the outdoor light sensor: [31]

NF1 If any outdoor light sensor does not work correctly, the control system for rooms should behave as if the outdoor light sensor had been submitting the last correct measurement of the outdoor light constantly.
NF2 If any outdoor light sensor does not work correctly, the default light scene for all rooms is that all ceiling light groups are on.
NF3 If any outdoor light sensor does not work correctly and a hallway section is occupied, the ceiling light group in this hallway section has to be on.

Needs in the case of a malfunction of the motion detector: [32]

NF4 If any motion detector of a room or a hallway section does not work correctly, the control system should behave as if the room or the hallway section were occupied.

Needs in a worst-case failure of the control system: [33]

NF5 If the ceiling light group in a hallway section is controllable neither automatically nor manually, the ceiling light group of this hallway section has to be on.

3.2.2 Safety and Legal Aspects

NF6 All hardware connections are made according to DIN standards.
NF7 No hazardous conditions for persons, inventory, or building are allowed.

3.2.3 User Interface

NF8 The control panels are easy and intuitive to use.
NF9 The system issues warnings on unreasonable inputs.

4 Dictionary of Terms

Keyword	Description
actuator	device that can be used by the control system to control an environmental quantity
ambient light level	illumination in a room
analog sensor	a sensor that measures an analog value
architecture	structure of a building, floor, or room
ceiling light group	luminary under or in the ceiling,
chosen light scene	a *light scene* chosen by a user using the room control panel for the case that a room is occupied
computer lab	room with a pool of terminals and workstations, open to all users and temporarily to students of a class
control panel	small device with a keyboard, LEDs for important states, and a simple display for textual messages
control system	hard- and software system that controls indoor climate, lighting, safety and security
current light scene	the light scene currently established by the control system
default light scene	a light scene for the case that a room is not occupied
desired light setting	the setting of a ceiling light group in a room or a hallway section desired by the control system
dimmable light	luminary that can be dimmed
dimmer-actuator	actuator controlling the output of a luminary
door	connection between rooms and hallway sections
door closed contact	electrical or magnetic gadget to determine the state of a door
facility manager	person responsible for running a building on a daily basis
facility manager control panel	a control panel for the facility manager
floor	part of a building
hallway section	part of a section between several rooms to connect them to each other
hallway sections ceiling light group	ceiling light group in a hallway section
hardware lab	room with terminals and other electronic devices
illumination	amount of light falling on a surface, measured in lux

Table 3: Dictionary of terms of the application domain

Keyword	Description
installation	equipment belonging to a building
light scene	a light scene is a predefined setting of the ambient light level and a prescription that determines in which way the ceiling light groups should be used to achieve this ambient light level. A light scene is given by: 1. name of the light scene 2. the desired ambient light level in a room 3. one of the following three options: window, wall, both window means that at first the ceiling light group near the window should be used to achieve the desired ambient light level and then the other ceiling light group wall means that at first the ceiling light group near the wall should be used to achieve the desired ambient light level and then the other ceiling light group both means that both ceiling light groups should be used equally to achieve the desired ambient light level
malfunction	incorrect behavior of a device
meeting room	a room open to all users
motion detector	sensor detecting motion of a person or animal in its range, state is on during positive detection
office	room for one or two users with terminals and/or workstations
outdoor light sensor	sensor measuring the illumination in a half sphere perpendicular to it's flat bottom
peripheral room	room for computer peripherals, copy machines; open to all users
push button	an actuator for switching on and off a ceiling light group; it is on, as long as pushed manually
room	part of a section
room control panel	a control panel in a room
safe illumination	illumination greater than 14 lux
section	part of a floor
sensor	device that can sense something
staircase	part of a building connecting several floors
status line	wire that has the status of a device as value
user	person occupying a room or a hallway section

Table 3: Dictionary of terms of the application domain, cont.

References

[Fe+99] R. L. Feldmann, J. Münch, S. Queins, S. Vorwieger, G. Zimmermann: *Baselining a Domain-Specific Software Development Process*, Technical Report SFB501 TR-02/99, University of Kaiserslautern, 1999

[PD99] *The Light Control Case Study: Problem Description*, original version at http://rn.informatik.uni-kl.de/~recs/problem/, University of Kaiserslautern, 1999

[CF99] *Customer Feedback of the LCCS*, http://rn.informatik.uni-kl.de/~recs/qna/, University of Kaiserslautern, 1999